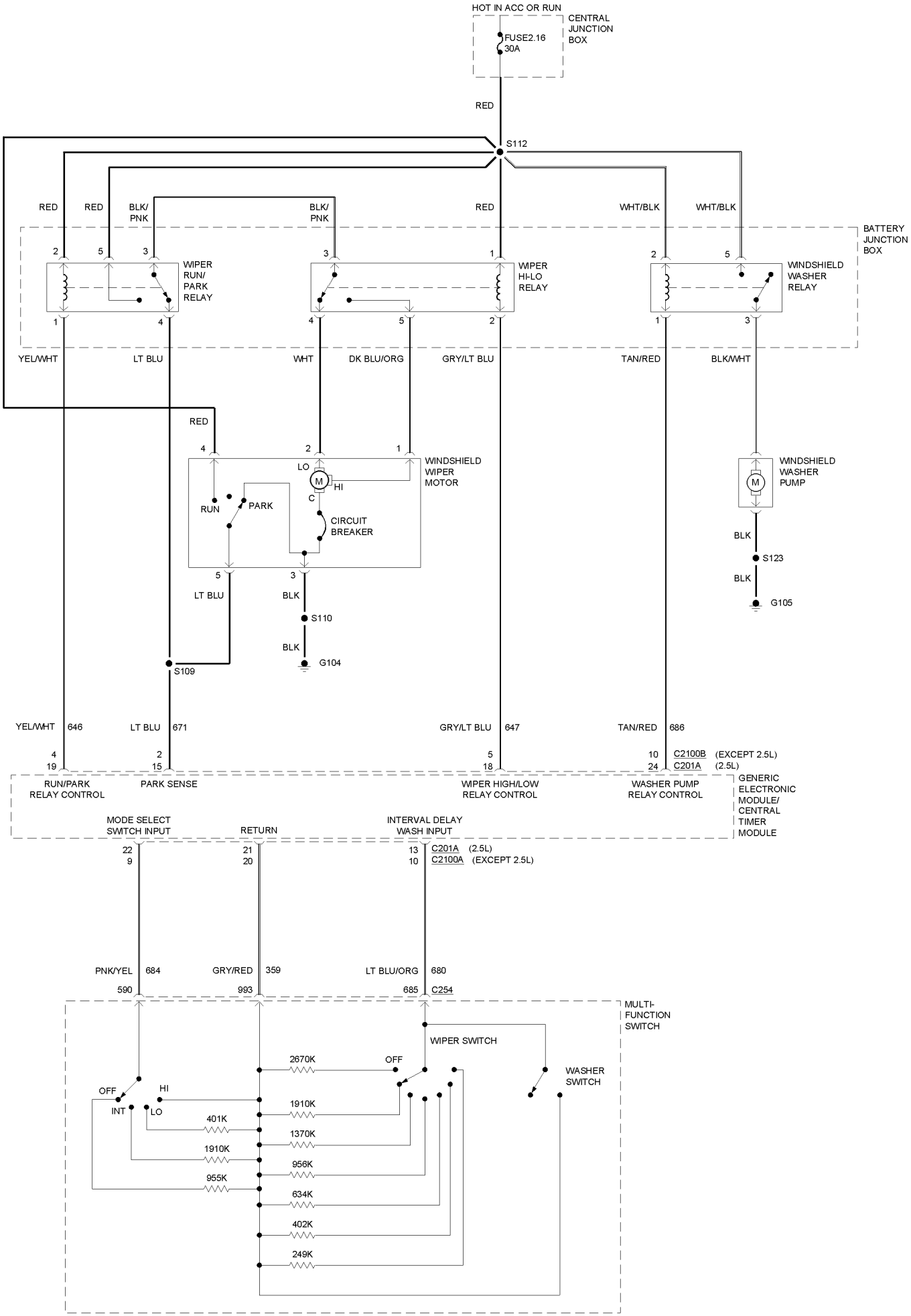
HOT IN ACC OR RUN
CENTRAL JUNCTION BOX
FUSE2.16 30A
RED
S112
RED
RED
BLK/PNK
BLK/PNK
RED
WHT/BLK
WHT/BLK
BATTERY JUNCTION BOX
WIPER RUN/PARK RELAY
WIPER HI-LO RELAY
WINDSHIELD WASHER RELAY
YEL/WHT
LT BLU
WHT
DK BLU/ORG
GRY/LT BLU
TAN/RED
BLK/WHT
RED
WINDSHIELD WIPER MOTOR
LO
HI
C
RUN
PARK
CIRCUIT BREAKER
WINDSHIELD WASHER PUMP
BLK
S123
BLK
G105
LT BLU
BLK
S110
BLK
G104
S109
YEL/WHT 646
LT BLU 671
GRY/LT BLU 647
TAN/RED 686
C2100B (EXCEPT 2.5L)
C201A (2.5L)
RUN/PARK RELAY CONTROL
PARK SENSE
WIPER HIGH/LOW RELAY CONTROL
WASHER PUMP RELAY CONTROL
GENERIC ELECTRONIC MODULE/ CENTRAL TIMER MODULE
MODE SELECT SWITCH INPUT
RETURN
INTERVAL DELAY WASH INPUT
C201A (2.5L)
C2100A (EXCEPT 2.5L)
PNK/YEL 684
GRY/RED 359
LT BLU/ORG 680
C254
MULTI-FUNCTION SWITCH
WIPER SWITCH
WASHER SWITCH
OFF
HI
INT
LO
2670K
1910K
401K
1370K
1910K
956K
955K
634K
402K
249K

143187